Order Code: 14.13.01000000 **List Price €1562.00**

PRO Plasma Cut 100

Key Features

- IGBT plasma cutting inverter
- Lightweight, portable modern design
- Variable cutting control
- HF ignition
- LED display
- Smooth precise cutting
- Simple operation
- Suitable for automated cutting (optional)
- PI50LT hand plasma torch 6m
- Generator friendly

5 Year Warranty *

Technical Data

AC 400V - 50/60 Hz	Ieff 17A
AMPS 20 - 100	kVA 15.8
CUT Clean 30mm Severance 35mm	% 100A @ 60%
PF Power Factor 0.93	220 Ltr/Min @ 5 bar (73 psi)
Dimensions LxWxH 565 x 255 x 440	IP.. Class: IP21S/F
	Kg 26.5

The Jasic Pro Plasma Cut 100 is professional high-end cutting inverter equipped with the latest IGBT technology.

This technologically advanced plasma inverter is extremely user-friendly and offers reliable cutting performance.

The machine provides variable cutting control that allows the operator to produce precise smooth cuts.

Accessories/Optional Items

Part Number	Description	€ List Price
* 14.00.00203001	Earth Clamp and 3m Cable	*19.00*
* 14.00.01576000	P150 LT 6MT Torch	*390.00*
* 14.00.02001000	LT150 Torch Head	*130.00*
* 14.00.01376000	Electrode	*2.50*
* 14.00.01378000	Diffuser	*2.44*
* 14.00.01377000	Swirl Ring	*8.34*
14.00.01371000	Cutting Tip 1.1	*2.18*
14.00.01372000	Cutting Tip 1.35	*2.18*
14.00.01373000	Cutting Tip 1.6	*2.18*
* 14.00.01374000	Cutting Tip 1.8	*2.18*
14.00.01375000	Gouging Tip 3.0	*2.18*
* 14.00.01389000	Nozzle Retaining Cap	*23.32*
14.00.01018000	Extended Diffuser	*8.76*
14.00.01517000	Extended Electrode	*4.28*
14.00.01001000	Extended Tip 1.35 - 90amp	*5.36*
14.00.01002000	Extended Tip 1.60 - 120amp	*5.36*
14.00.01003000	Extended Tip 1.8 - 150amp	*5.36*
14.00.01386000	Spacer Spring	*1.58*
14.00.01408000	Double Pointed Spacer	*11.00*
14.09.01409000	Crown Spacer	*15.60*

*** Comes as Standard**

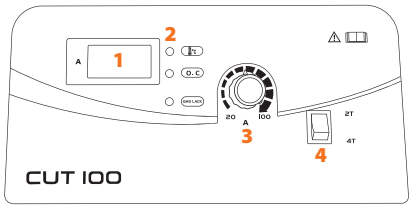

1	Digital Display
2	Warning Indicator
3	Amperage Control Dial
4	2T/4T Indicator

JASIC

www.jasic.co.uk

Plasma Cut Series

| Plasma Cut 60 (JP-60) | Plasma Cut 80 (JP-80) |
| Plasma Cut 100 (JP-100) |

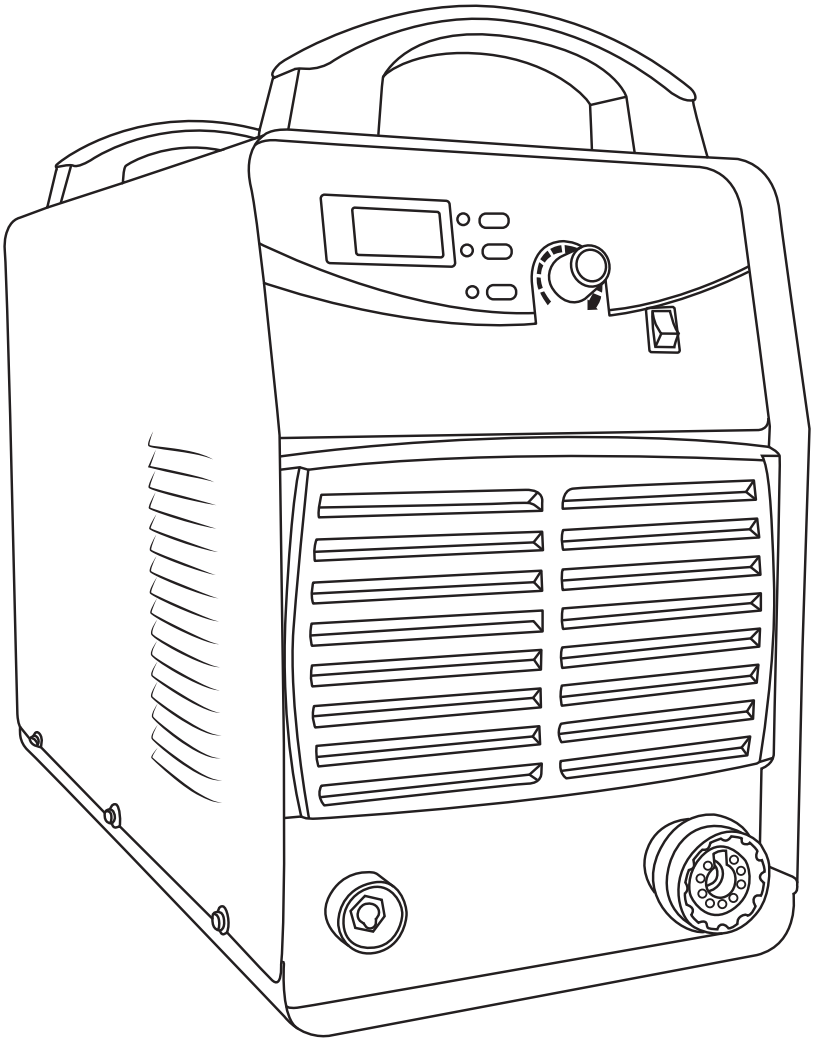

Operator Manual

Intertek

WILKINSON STAR
wilkinsonstar.com

Your new product

Thank you for selecting this Jasic Technology, Wilkinson Star product.

This product manual has been designed to ensure that you get the most from your new product. Please ensure that you are fully conversant with the information provided paying particular attention to the safety precautions. The information will help protect yourself and others against the potential hazards that you may come across.

Please ensure that you carry out daily and periodic maintenance checks to ensure years of reliable and trouble free operation.

Wilkinson Star Limited are a leading supplier of equipment in the UK and our products are supported by our extensive service network. Call your distributor in the unlikely event of a problem occurring. Please record below the details from your product as these will be required for warranty purposes and to ensure you get the correct information should you require assistance or spare parts.

Date purchased _____

From where _____

Serial Number _____

(The serial number will normally be located on the equipment data plate on the underside of the machine or on the rear panel)

Please note products are subject to continual development and may be subject to change without notice

1

Safety Precautions

These general safety norms cover both arc welding machines and plasma cutting machines unless otherwise noted.

The equipment must only be used for the purpose it was designed for. Using it in any other way could result in damage or injury and in breach of the safety rules.

Only suitably trained and competent persons should use the equipment. Operators should respect the safety of other persons.

Prevention against electric shock

The equipment should be installed by a qualified person and in accordance with current standards in operation.It is the users responsibility to ensure that the equipment is connected to a suitable power supply. Consult with your utility supplier if required

If earth grounding of the work piece is required, ground it directly with a separate cable.

Do not use the equipment with the covers removed.

Do not touch live electrical parts or parts which are electrically charged.

Turn off all equipment when not in use.

Cables (both primary supply and welding) should be regularly checked for damage and overheating. Do not use worn, damaged, under sized, or poorly jointed cables.

Ensure that you wear the correct protective clothing, gloves, head and eye protection.

Insulate yourself from work and ground using dry insulating mats or covers big enough to prevent any physical contact with the work ground.

Never touch the electrode if you are in contact with the work ground, or another electrode from a different machine.

Do not wrap cables over your body.

Ensure that you take additional safety precautions when you are welding in electrically hazardous conditions such as damp environments, wearing wet clothing, and metal structures. Try to avoid welding in cramped or restricted positions.

Ensure that the equipment is well maintained. Repair or replace damaged or defective parts immediately. Carry out any regular maintenance in accordance with the manufacturers instructions.

Safety against fumes and welding gases

Locate the equipment in a well-ventilated position.

Keep your head out of the fumes. Do not breathe the fumes.

Ensure the welding zone is in a well-ventilated area. If this is not possible provision should be made for suitable fume extraction.

If ventilation is poor, wear an approved respirator.

Read and understand the Material Safety Data Sheets (MSDS's) and the manufacturer's instructions for metals, consumable, coatings, cleaners, and de-greasers.

Do not weld in locations near any de-greasing, cleaning, or spraying operations. Be aware that heat and rays of the arc can react with vapours to form highly toxic and irritating gases.

Do not weld or cut coated metals, unless the coating is removed from the weld area, the area is well ventilated, and while wearing an air-supplied respirator. The coatings on many metals can give off toxic fumes if welded.

Prevention against burns and radiation

Arc rays from the welding process produce intense, visible and invisible (ultraviolet and infrared) rays that can burn eyes and skin.

Wear an approved welding helmet fitted with a proper shade of filter lens to protect your face and eyes when welding or watching

Wear approved safety glasses with side shields under your helmet.

Never use broken or faulty welding helmets.

Always ensure there are adequate protective screens or barriers to protect others from flash, glare and sparks from the welding area. Ensure that there are adequate warnings that welding or cutting is taking place.

Wear suitable protective flame resistant clothing.

The sparks and spatter from welding, hot work pieces, and hot equipment can cause fires and burns

Welding on closed containers, such as tanks, drums, or pipes, can cause them to explode.

Accidental contact of electrode to metal objects can cause arcs, explosion, overheating, or fire.

Check and be sure the area is safe and clear of inflammable material before carrying out any welding.

Protection against noise

Some welding and cutting operations may produce noise.

Wear safety ear protection to protect your hearing.

Protection from moving parts

When the machine is in operation keep away from moving parts such as motors and fans. Moving parts, such as the fan, may cut fingers and hands and snag garments.

Protections and coverings may be removed for maintenance and controls only by qualified personnel, after first disconnecting the power supply cable.

Replace the coverings and protections and close all doors when the intervention is finished, and before starting the equipment.

Take care to avoid getting fingers trapped when loading and feeding wire during set up and operation.

When feeding wire be careful to avoid pointing it at other people or toward your body.

Always ensure machine covers and protective devices are in operation.

Precautions against fire and explosion

Avoid causing fires due to sparks and hot waste or molten metal

Ensure that appropriate fire safety devices are available near the cutting / welding area.

Remove all flammable and combustible materials from the cutting / welding zone and surrounding areas

Do not cut/weld fuel and lubricant containers, even if empty. These must be carefully cleaned before they can be cut/ welded.

Always allow the cut/welded material to cool before touching it or placing it in contact with combustible or flammable material.

Do not work in atmospheres with high concentrations of combustible fumes, flammable gases and dust.

Always check the work area half an hour after cutting to make sure that no fires have begun.

Risks due to magnetic fields

The magnetic fields created by high currents may affect the operation of pacemakers or electronically controlled medical equipment.

Wearers of vital electronic equipment should consult their physician before beginning any arc welding, cutting, gouging or spot welding operations.

Do not go near welding equipment with any sensitive electronic equipment as the magnetic fields may cause damage.

RF Declaration

Equipment that complies with directive 2004/108/EC concerning electromagnetic compatibility (EMC) and the technical requirements of EN60974-10 is designed for use in industrial buildings and not those for domestic use where electricity is provided via the low voltage public distribution system. Difficulties may arise in assuring class A electromagnetic compatibility for systems installed in domestic locations due to conducted and radiated emissions.

In the case of electromagnetic problems, it is the responsibility of the user to resolve the situation. It may be necessary to shield the equipment and fit suitable filters on the mains supply.

LF Declaration

Consult the data plate on the equipment for the power supply requirements.

Due to the elevated absorbance of the primary current from the power supply network, high power systems affect the quality of power provided by the network. Consequently, connection restrictions or maximum impedance requirements permitted by the network at the public network connection point must be applied to these systems.

In this case the installer or the user is responsible for ensuring the equipment can be connected, consulting the electricity provider if necessary.

Materials and their disposal

The equipment is manufactured with materials, which do not contain any toxic or poisonous materials dangerous to the operator.

When the equipment is scrapped, it should be dismantled separating components according to the type of materials.

Do not dispose of the equipment with normal waste. The European Directive 2002/96/EC on Waste Electrical and Electronic Equipment states the electrical equipment that has reached its end of life must be collected separately and returned to an environmentally compatible recycling facility.

Handling of Compressed gas cylinders and regulators

All cylinders and pressure regulators used in welding operations should be handled with care.

Never allow the electrode, electrode holder or any other electrically “hot” parts to touch a cylinder.

Keep your head and face away from the cylinder valve outlet when opening the cylinder valve.

Always secure the cylinder safely

Never deface or alter any cylinder

2

Product Overview

The CUT series are inverter cutting machines using advanced inverter technology.

They are products with stable performance.

With PWM technology and high power component MOSFETs (or IGBTs), it inverts the DC voltage, which is rectified from 50Hz/60Hz input AC voltage, to 30K~100KHz AC high voltage. Then the voltage is dropped and rectified to output the high power DC power supply required for cutting. The machine uses a switching power supply inverter technology, greatly reducing the volume and weight of the cutter, and obviously enhancing the power conversion efficiency by 30%.

Features of CUT series

Economic and practical using compressed air as the plasma gas source.

They can cut thick steel plate conveniently and quickly.

It has an easy to ignite arc, and post-flow function is available.

It has a wide range of uses, especially for cutting stainless steel, copper, cast iron and aluminium, etc.

With simple operation and high cutting speed, smooth cutting surface can be obtained, and cleaning is often unnecessary.

The Cut 60 and Cut 80 use a non HF arc ignition mode.The Cut 100 uses HF ignition.

Application

Economic and practical using compressed air as the plasma gas source. The plasma cutter has a wide range of uses, especially for cutting metal plates of carbon steel, alloy steel, stainless steel, galvanised steel, copper and aluminium, etc.

It can be widely used in various industries involving metal cutting such as boiler and pressure vessel manufacturing, chemical container manufacturing, power plant installation and construction industry, metallurgy, chemical engineering, aerospace, automobile and engineering vehicles manufacturing and construction, etc.

3

Technical data

Model	CUT60	CUT80	Cut 100
Rated input voltage	AC400V±15%(3 phases) , 50/60Hz		
Rated output	60A/104V	80A/112V	100A/120V
Rated input capacity (KVA)	7	12	14.3
Rated input current(A)	15	22	21.7
Cutting current range (A)	20-60	20-80	20-100
No-load voltage (V)	290	290	315
Duty cycle Imax (40℃)	40%	40%	60%
Efficiency (%)	85	85	90
Power factor	0.7	0.7	0.93
Protection class	IP21S	IP21S	IP 21
Insulation class	F	F	F
Overall size (mm) (L×W×H)	540×250×380	540×250×380	555×238×415
Weight (kg)	14.5	15	23
Ignition method	Non HF	Non HF	HF

4

Controls

PANEL LAYOUT

FRONT **REAR**

1	CONTROL PANEL	5	FAN
2	WORK RETURN SOCKET	6	MAINS SWITCH
3	TORCH CONNECTION SOCKET	7	MAINS CABLE
4	AIR REGULATOR		

CONTROL PANEL

1	DIGITAL METER	4	CURRENT ADJUSTMENT
2	2T/4T (AUTOMATION)	5	ALARM INDICATOR
3	PURGE - RUN SWITCH	6	MAINS INDICATOR

AIR REGULATOR AND GUAGE

5

Installation

Unpacking

Check the packaging for any signs of damage.

Carefully remove the machine and retain the packaging until the installation is complete.

Location

The machine should be located in a suitable position and environment. Care should be taken to avoid moisture, dust, steam, oil or corrosive gases

Place on a secure level surface and ensure that there is adequate clearance around the machine (at least 20cm) to ensure natural airflow.

Input connection

Before connecting the machine you should ensure that the correct supply is available. Details of the machine requirements can be found on the data plate of the machine or in the technical parameters shown in the manual.

The equipment should be connected by a suitably qualified competent person. Always ensure the equipment has a proper grounding.

Never connect the machine to the mains supply with the panels removed.

Connection of work cable

Insert the quick plug on the work cable into the quick socket at the bottom of the front panel of the machine, and tighten it clockwise. Clamp the workpiece with the work clamp at the other end of the earth cable.

Connection of cutting torch

Connect the central connection plug on the cutting torch to the central connection socket of the power supply, and tighten It clockwise to avoid gas leakage.

Connection of the air supply

The unit should be connected to a suitable, clean

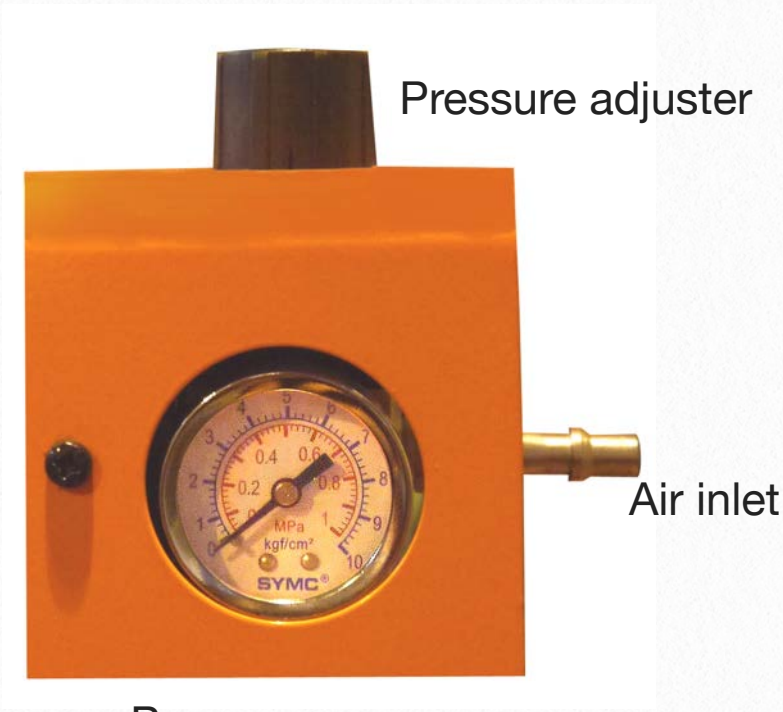

and dry air supply. If there is oil or water in the air a suitable three stage filter should be connected.

If the quality of air is poor, the cutting speed will decrease, the cutting quality will lower, the cutting thickness will reduce, and the service life of wearing parts will be shortened. In order to obtain the optimal performance, the maximum particle size of air should be 0.1μm, the maximum concentration of air should be 0.1mg/m3, the maximum dew point of air should be -40°C, the maximum oil concentration should be 0.1mg/m3.

The air supply pressure should not exceed 8 bar and normal cutting pressure will be around 6 bar.

Installation of the cutting torch

1) Screw the end of the electrode with screw thread into the torch head, and tighten it.

2) Insert the other end of the electrode into the distributor.

3) Connect the nozzle with the electrode and distributor.

4) Connect the protective sleeve with the nozzle, screw it into the torch head, and tighten it.

Note: Screw the electrode into the torch with an inner hexagon spanner, and tighten it. Otherwise, the inner thread of the electrode will be burned.

Introduction of the cutting torch

The plasma cutter CUT100 uses the P150 plasma cutting torch for its standard configuration.

The plasma cutters CUT60 and Cut 80 use the PT100 plasma cutting torch for its standard configuration

The frequency of replacing the wearing parts of the cutting torch depends on the aspects below:

The thickness of the metal to be cut.

The average cutting length.

Whether it is used for automatic cutting or it is used for handheld cutting.

Air quality (whether there is oil, water or other contaminants)

Whether it is used to punch on the metal or it is used to cut from the metal edge.

Whether the distance between the cutting torch and the workpiece is appropriate when cutting with wearing parts without protective sleeves.

Whether the cutting height is appropriate.

The quality of the wearing parts used.

Under normal circumstances, the nozzle will wear out first in hand-held cutting.

The general rule is: The wearing parts will expire after the practical “arc discharge” time reaches 1~2 hours when it is used for handheld cutting. The specific time depends on the above factors. The wearing parts will expire after the practical “arc discharge” time reaches 3~5 hours when it is used for automatic cutting. Selecting wearing parts

WARNING: Plasma arc may cause burns or scalds during the instantaneous start of cutting torch.

The Plasma arc will be produced at the moment after the cutting torch is started, so make sure that the power is cut off before replacing the wearing parts.

PT-100 Plasma Cutting Torch

Current: 30-120 Amps • Duty Cycle: 120 Amps @ 60 % • Gas: Air /N2 • Gas Pressure: 70-80 psi (4.6-5.0 Bar) • Gas Flow: 420scfh (200 lpm)

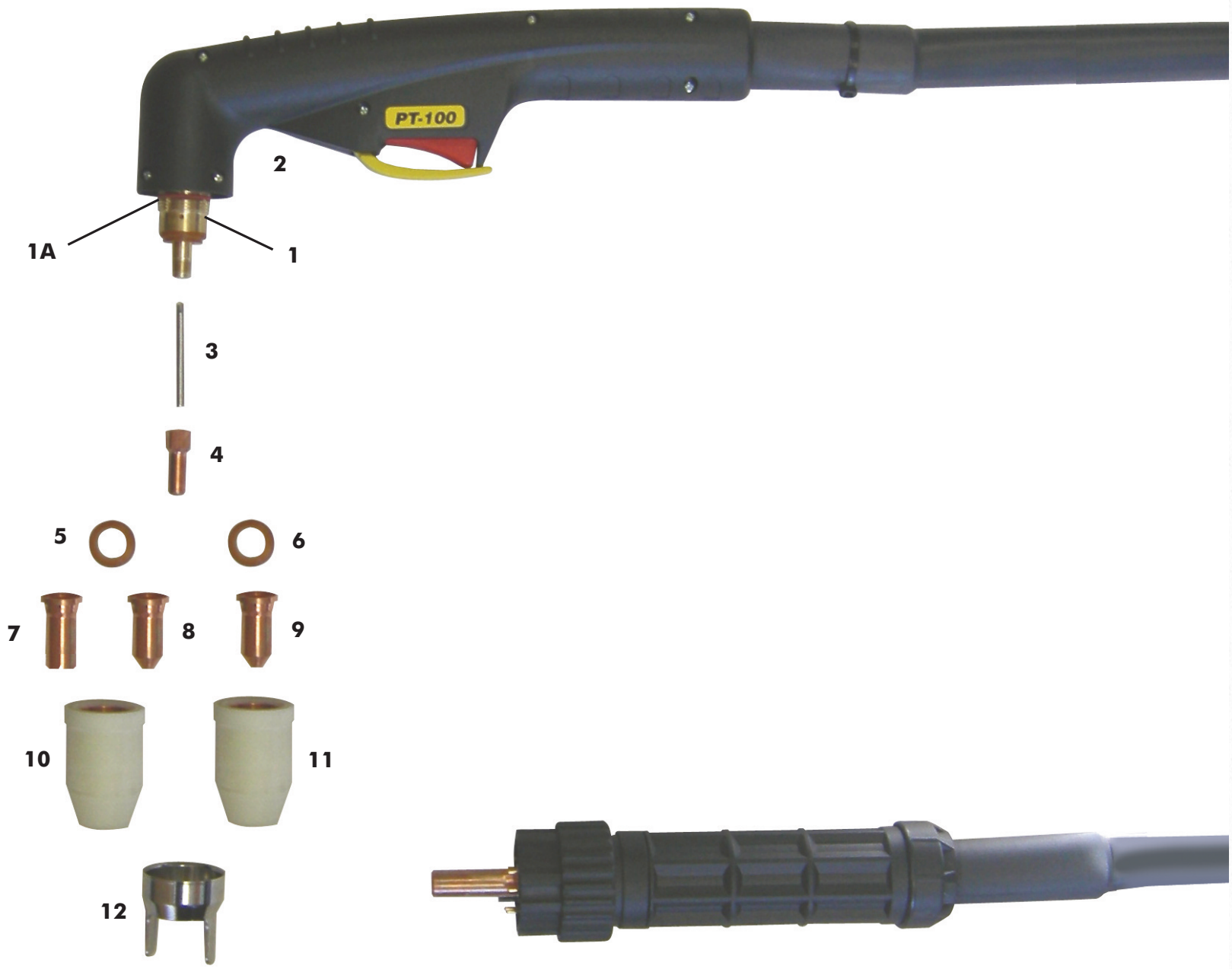

TORCH PACKAGE

Item No	Description
09721/LG	6mtr Cable Central Connection

MAIN CONSUMABLES & SPARE PARTS

Item No	Part No	Description	Pack Qty
1	• 09700	PT100 Torch Head	1
1A	• 51190.41	'O' Ring	5
2	• 09705	Handle c/w Switch	1
3	• 09700.48	Cooling Tube	1
4	• 52556	Electrode - Back Striking	5
5	60025	Gas Distributor 30-70A	1
6	• 60026	Gas Distributor 80-120A	1
7	51245.09	Tip Contact Cutting 0.9mm 30-40A Back Striking	10
8	51246.10	Tip Cutting 1.0mm 40-50A Back Striking	10
	51246.11	Tip Cutting 1.1mm 50-60A Back Striking	10
	51246.12	Tip Cutting 1.2mm 60-70A Back Striking	10
9	51248.14	Tip Cutting 1.4mm 80-90A Back Striking	10
	51248.15	Tip Cutting 1.5mm 100-110A Back Striking	10
	• 51248.16	Tip Cutting 1.6mm 110-120A Back Striking	10
10	60500	Retaining Cap 30-70A	1
11	• 60501	Retaining Cap 80-120A	1
12	• 60444	Double Pointed Spacer (For use with items 8 & 9 Only)	1
13	51864	Circle Cutting Attachment (Not Illustrated)	1

• Denotes Standard Set Up

STARPARTS

P150LT COMPATIBLE CEBORA

Gas: Single • Air Flow: 220 Litres Per Min • Rating: 150 Amp @ 60% Duty Cycle • Cutting Capacity: 35mm Most Materials

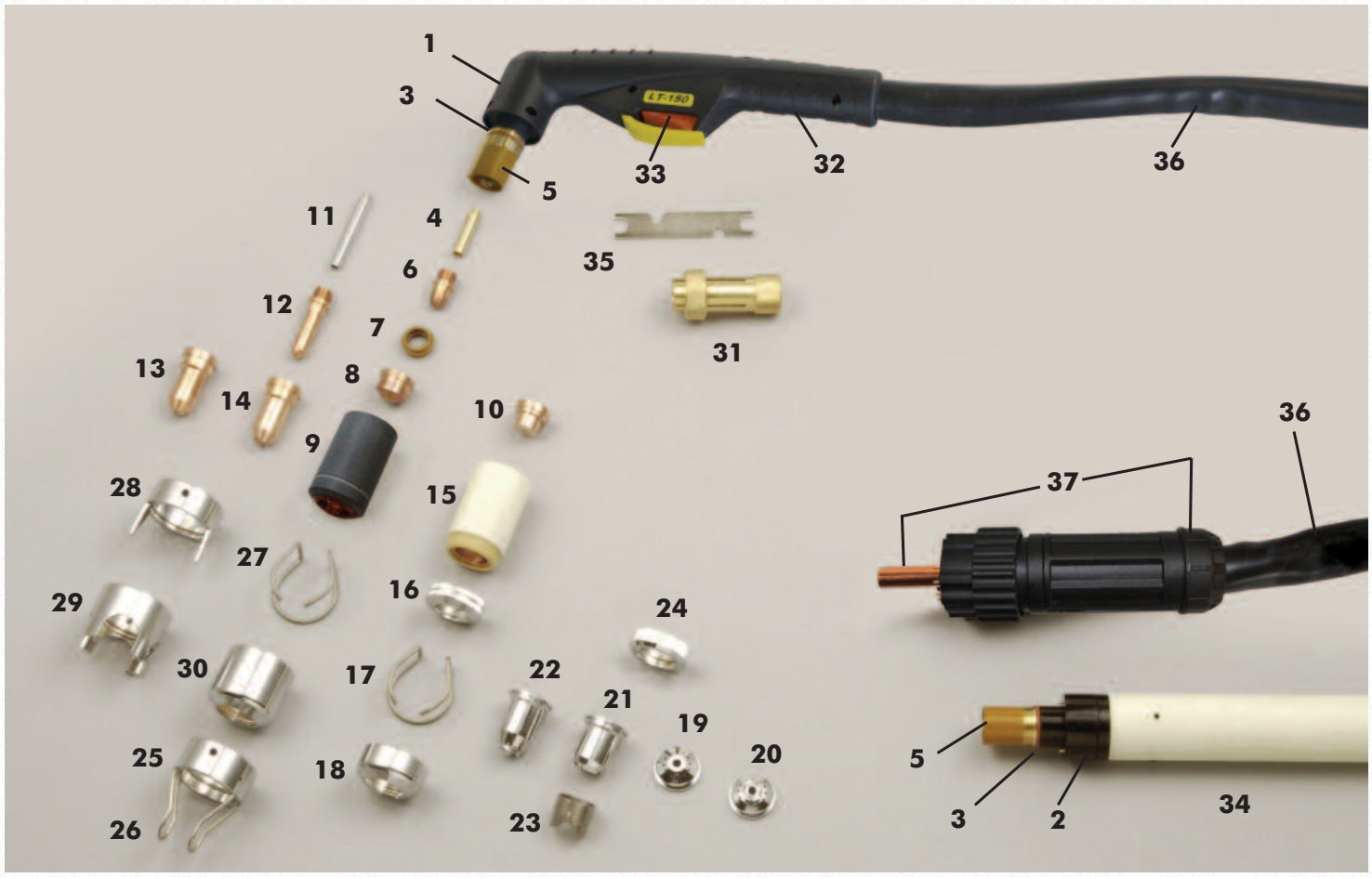

STARPARTS

TORCH PACKAGES

Item No	Description
C1576LT	Hand Torch 6mt Central Fitting
C1578LT	Hand Torch 12mt Central Fitting
C1577	Machine Torch 6mt Central Fitting
C1579	Machine Torch 12mt Central Fitting

MAIN CONSUMABLES

Item No	Part No	Description	Pack Qty
1	02001	Torch Head	1
2	C1354	Torch Head - Macine Torch	1
3	C3160067	'O' Ring - Torch Head	10
4	C1378	Diffuser	1
5	C1017	Front Insulator - Vespel	1
6	C1376	Electrode Hafnium	5
7	C1377	Swirl Ring Vespel	1
8	C1371	Cutting Tip 1.1	10
	C1372	Cutting Tip 1.35	10
	C1373	Cutting Tip 1.6	10
	C1374	Cutting Tip 1.8	10
	C1375	Gouging Tip 3.0	10
9	C1389	Nozzle Retaining Cap	1
10	C1390	Contact Cutting Tip 1.35	10
	C1391	Contact Cutting Tip 1.6	10
	C1392	Contact Cutting Tip 1.8	10
11	C1018	Extended Diffuser	1
12	C1517	Extended Electrode	5
13	C1369	Extended Contact Cutting Tip- 50 Amp	5
14	C1001	Extended Tip 1.35 - 90 Amp	5
	C1002	Extended Tip 1.6 - 120 Amp	5
	C1003	Extended Tip 1.8 - 150 Amp	5
15	C1393	Contact Nozzle Retaining Cap	1
	C1006	Contact Nozzle Ret cap - Long Life	1

MAIN CONSUMABLES

Item No	Part No	Description	Pack Qty
16	C1007	Spring Holder Protection Nut	1
17	C1008	Spacer Springs for C1007	5
18	C1009	Gouging Spacer	1
19	C1010	Spacer for Contact Cutting - Hand Use with items 8, 15 & 24	1
	C1011	Spacer for Contact Cutting - Hand Use with items 10, 15 & 24	1
	C1394	Spacer for Contact Cutting - Hand Use with items 10, 15 & 24	1
20	C1012	Spacer - Machine Use with items 8, 15 & 24	1
	C1013	Spacer - Machine Use with items 10, 15 & 24	1
21	C1014	Shield Cup - Hand Max 50 Amp	1
22	C1015	Spacer for Contact Cutting - Hand	1
23	C1020	Spacer for Extended Tips High Amp	1
24	C1016	Locking Nut	1
25	C1004	Spacer c/w Springs	1
26	C1005	Spacer Springs	5
27	C1386	Stand Off Spring	5
28	C1408	Double Pointed Spacer	1
29	C1409	Crown Spacer	1
30	C1406	Gouging Spacer	1
31	C1509	Extractor for Swirl Ring	1

SECONDARY CONSUMABLES

32	09706	Handle c/w Micro Switch - Hand Torch	1
33	07301.20	Switch	1
34	C3055623	Handle Machine Torch	1
35	C3045012	Wrench for Electrode	1
36	C970	6mt Cable Assy Hand Torch	1
	C980	12mt Cable Assy Hand Torch	1
	C04320	6mt Cable Assy Machine Torch	1
	C04330	12mt Cable Assy Machine Torch	1
37	C534-JP	Central Connector	1

© WILKINSON STAR LTD

6

Operation

Before starting any cutting activity ensure that you have suitable eye protection and protective clothing. Also take the necessary steps to protect any persons within the area.

Check that all connections have been made as shown above

Check the following before starting the machine.

1) Check if the machine is reliably grounded according to the relevant standard.

2) Check that there are no bad contacts.

3) Check if the power cord is connected to the correct input voltage.

4) Check if the connecting cables and gas hoses are in good condition and are not twisted.

Operation

1) Turn on the power switch on the back panel of the machine, and the power LED is on.

2) Select the working mode and function.

3) Set cutting current according to the thickness of workpiece.

4) Bring the copper nozzle of the cutting torch at a distance of about 2mm between the copper nozzle of the torch and the workpiece.), and then push the torch trigger. After the arc is ignited and cutting starts.

5) It is recommended that a torch of maximum length of 6 metres is used. If the torch cable is too long, the performance of this cutting machine such as arc ignition will possibly be affected due to the fact that the inner resistance of the cable will reduce the output voltage.

Notes for cutting operation

1) Do not touch the hot workpiece with bare hands to avoid burning.

2) It is recommended not to ignite the arc in the air if not necessary, for it will shorten the lifespan of the electrode and nozzle of the torch.

3) It is recommended to initiate the cutting from the edge of workpiece, unless penetration is needed.

4) Ensure spatter comes from the bottom of workpiece while cutting. If spatter comes upward from the top of workpiece, it indicates that the workpiece has not been fully cut through. This could be due to not enough power or the cutting torch is moved too fast.

5) For cutting a round workpiece or to meet precise cutting requirement, a stencil board or other tools are needed.

6) It is recommended to pull the cutting torch while cutting.

7) Keep the nozzle of cutting torch upright over the workpiece, and check if the arc is moving with the cutting line. Do not bend the cable too much, step on or press upon the cable to avoid restricting the air flow. The cutting torch may be burned if the air flow is too low. Keep the cutting cable away from sharp edges.

8) When the workpiece is nearly cut off, slow down the cutting speed and release the torch trigger to stop cutting.

9) Maintain the torch consumables frequently to prolong the life

10) Always ensure the correct consumables are fitted in the torch. Incorrect items may cause damage to the torch or machine

Cutting parameters tables

Cutting speed (m/min) when cutting current is 40A

Cutting thickness (mm)	0.1	1	2	3	4	5	6	7	8	9
Mild steel		8		1.5			0.4			
Galvanized steel		8		1.5			0.4			
Stainless steel		8		1.5			0.4			
Aluminum		8		1.5						
Brass		0.75								
Red copper		0.75								

Cutting speed (m/min) when cutting current is 60A

Cutting thickness(mm)	0.1	5		10		15		20		25
Mild steel		1.9		0.5		0.3		0.15		0.1
Galvanized steel		1.9		0.5		0.3		0.15		0.1
Stainless steel		1.9		0.5		0.3		0.15		0.1
Aluminum		0.8		0.3		0.2		0.12		
Brass		0.5								
Red copper		0.5								

Cutting speed (m/min) when cutting current is 100A

Cutting thickness(mm)	0.1	5	10	15	20	25	30	35	40
Mild steel		3.3	1.1	0.65	0.5	0.3			0.1
Galvanized steel		3.3	1.1	0.65	0.5	0.3			0.1
Stainless steel		2.9	0.95	0.65	0.5	0.3			0.1
Aluminum		2	0.6	0.38	0.25	0.15	0.1		
Brass		0.7	0.1						
Red copper		0.7	0.1						

For welder training please visit our Academy website at

www.wilkinson-welding-academy.com

Precautions

1) Make sure the place to install the machine can bear the weight of the cutting machine.

2) Do not install the machine at places where water may splash, such as near water pipes.

3) Cutting should be carried out in dry environment with humidity of 90% or less.

4) The temperature of the working environment should be between -10°C and 40°C.

5) Avoid cutting in the open air unless sheltered from sunlight and rain. Keep it dry at all times and do not place it on wet ground or in puddles.

6) Avoid cutting in dusty area or environment with corrosive chemical gas.

7) Do not carry out cutting with the cutting machine placed on a platform with a pitch greater than 15°.

Overcurrent/overvoltage/overheating protection circuit is installed in this machine. When the mains voltage, output current or inner temperature exceeds the set standard, the machine will stop automatically. However, excessive use (e.g. too high voltage) of machine may also damage the machine, so please note:

Good ventilation
This cutting machine can create powerful cutting current and has strict cooling requirements that cannot be met with natural ventilation. Therefore the built-in fan is very important in enabling the machine to work stable with effective cooling. The operator should make sure that the louvers be uncovered and unblocked. The minimum distance between the machine and nearby objects should be 30cm.

Overvoltage
This machine is of automatic mains voltage compensation, which ensures that the cutting current varies within the given range. In case that the input mains voltage exceeds the tolerance value, it would possibly damage the machine. The operator should understand this circumstance fully and adopt relevant precautions.

Overload.
Remember to observe the max load current at any time (refer to the corresponding duty cycle). Make sure that the cutting current should not exceed the maximum load current. Overload could obviously shorten the machine's lifespan, or even damage the machine.
A sudden halt may occur with the yellow LED on the front panel on while the machine is of over-load status. Under this circumstance, it is unnecessary to restart the machine. Keep the built-in fan working to lower the temperature inside the machine. Cutting can be continued after the inner temperature falls into the standard range and the yellow LED is off.

7

Maintenance and troubleshooting

The following operation requires sufficient professional knowledge on electric aspects and comprehensive safety knowledge. Make sure the input cable of the machine is disconnected from the electricity supply and wait for 5 minutes before removing the machine covers.

In order to guarantee that the arc welding machine works efficiently and in safety, it must be maintained regularly. Operators should understand the maintenance methods and means of arc welding machine operation. This guide should enable customers to carry on simple examination and safeguarding by oneself, try to reduce the fault rate and repair times of the arc welding machine, so as to lengthen service life of arc welding machine

Period	Maintenance item
Daily examination	Carry out a full visual inspection. Check for any damage to the machine, leads, cables and connections. Replace where necessary. Switch on the machine and check for any warning Led's and general operation
Monthly examination	Using the dry compressed air to clean the inside of arc welding machine. Especially check for build up of dust / debris on intake grills, main voltage transformer, inductance, IGBT modules, the fast recover diode and PCB, etc. Take care when blowing electronic components and do not dislodge any wiring connections Check the security of output connections and plugs. Replace if signs of overheating.
Yearly examination	Carry out an annual service. Check earth continuity and insulation resistance of the machine at the relevant points. PLEASE NOTE THIS WORK SHOULD BE CARRIED OUT BY A TRAINED COMPETENT PERSON.

Troubleshooting

Before arc cutting machines are dispatched from the factory, they have already been checked thoroughly. The machine should not be tampered with or altered.

Maintenance must be carried out carefully. If any wire becomes loose or is misplaced, it maybe potential danger to user!

Only professional maintenance personnel should repair the machine!

Ensure the power is disconnected before working on the machine. Always wait 5 minutes after power switch off before opening the case.

Fault symptom	Possible cause
Turn on the machine, the power indicator illuminates, the fan does not work, and the control button does not function.	Overvoltage protection occurs: Shut down the machine, and restart it after a few minutes.
Turn on the machine, the power indicator illuminates and the fan works. When pressing the control button of the cutting torch, the solenoid valve inside the machine functions, but there is no HF discharge rustling and the red LED inside the machine is on.	1) The MOSFET (or IGBT) on the top PCB is damaged. (The drive module is damaged.) 2) The step-up transformer on the bottom PCB is damaged. 3) The control module is damaged.
Turn on the machine, the power indicator illuminates and the fan works. When pressing the control button of the cutting torch, the solenoid valve inside the machine functions, but there is no HF discharge rustling and the red LED inside the machine is off.	The arc ignition part fails: 1) There is electrode sticking inside the discharge nozzle or the electrode distance of the discharge nozzle is too long. 2) There is short circuit or bad contact in the primary coil of the arc ignition transformer. 3) There is leakage of the HF capacitor 102/10KV. 4) The relay is damaged.
Arc can not be ignited.	1) The input voltage is too low. 2) The air pressure is overly high or overly low.

8

Parts List

Cut 60 /80

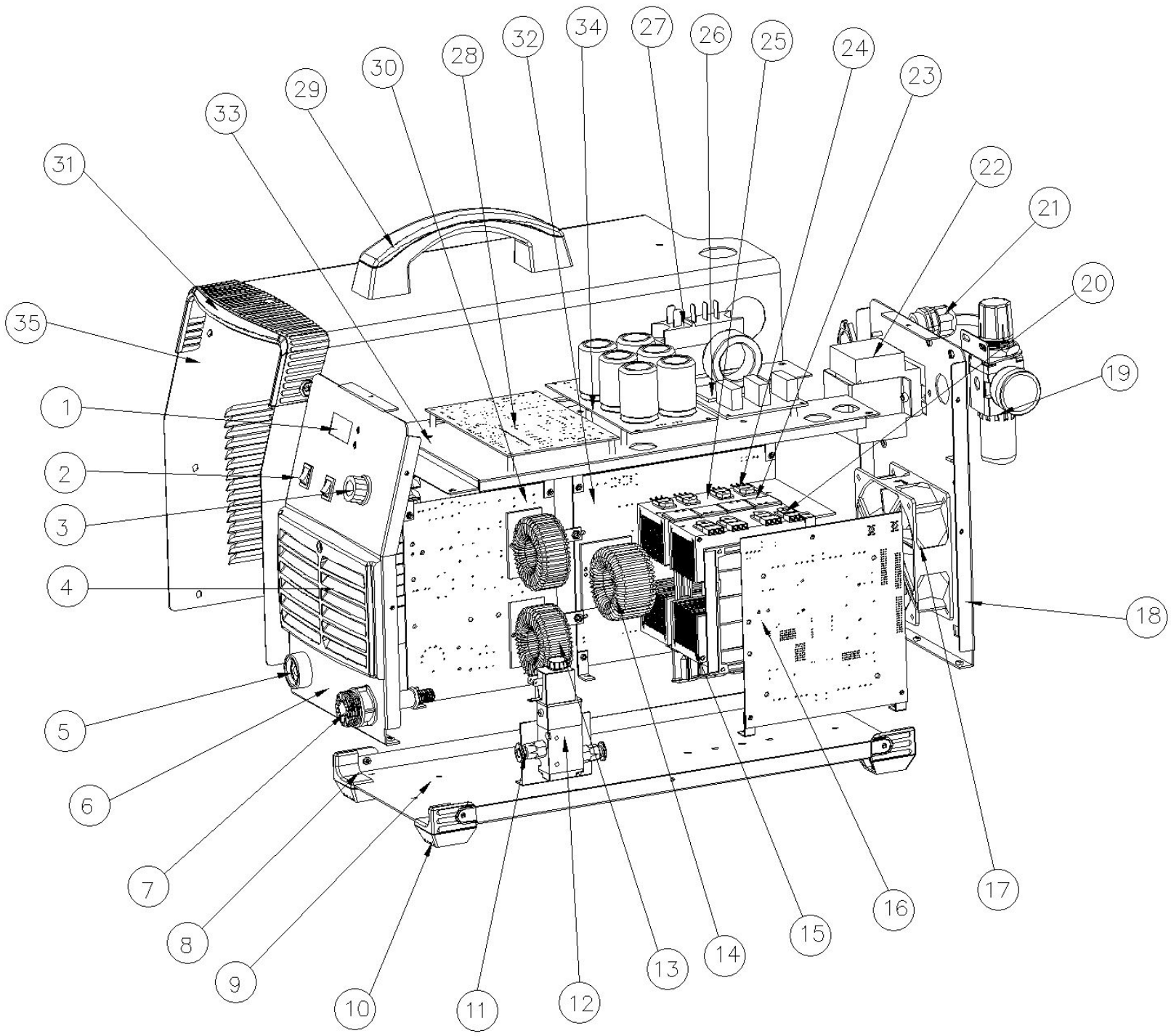

No.	Part number	Description	No.	Part number	Description
1	10052709	Digital display board	19	10035518	Relief valve
2	10004944	Transform switch	20	10046002	IGBT
3	10040930	Knob	21	10004887	Cable clip
4	10047358	Front panel blinds	22	10021936	Power switch
5	10004637	Quick socket	23	10049874	Column
6	10051490	Front panel	24	10006256	Rectifier
7	10053206	Plasma center socket & wires	25	10049894	heat sink
8	10046932	Left plastic	26	10043995	EMC board
9	10049887	Base plate	27	10049741	rectifier bridge & wires
10	10046933	Right plastic	28	10052876	Control board
11	10028470	Gas connector	29	10046896	Handle
12	10048389	Solenoid value	30	10052518	Arc striking board
13	10049735	Reactor	31	10047357	trimming
14	10049829	CUT60 main transformer	32	10052906	CUT60 Rectifier board
	10049736	CUT80 main transformer		10053198	CUT80 Rectifier board
15	10049893	Radiator	33	10051645	middle clapboard
16	10052907	CUT60 inverter board	34	10053196	CUT60 filter board
	10052907	CUT80 inverter board		10053581	CUT80 filter board

Cut 100

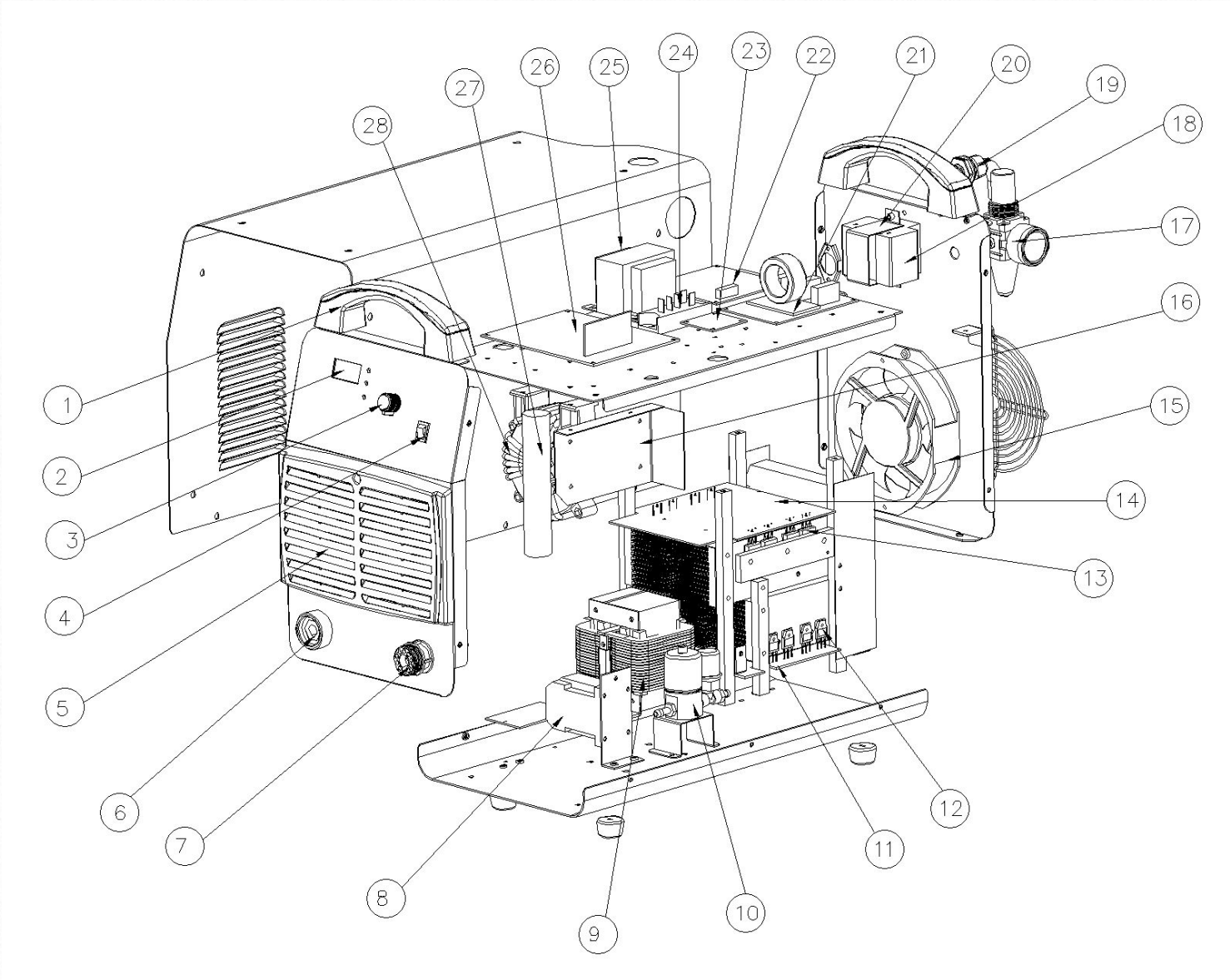

No.	Part number	Description	No.	Part number	Description
1	10046896	Handle	16	10048690	Arc striking board
2	10046712	Digital display	17	10035518	Relief valve
3	10004917	Knob	18	10021936	Power switch
4	10004944	2T / 4T switch	19	10004886	Cable clip
5	10047339	Front grill	20	10022274	Switch Angle support
6	10004637	Quick connector	21	10043995	EMC board
7	10004622	Torch connector	22	10049050	Power transfer board
8	10006525	AC contactor	23	10049048	Arc starting control board
9	10035516	Reactor	24	10049105	Silicon bridge and wire
10	10046491	Solenoid valve	25	10052794	Power transformer and wire
11	10049042	Rectifier board	26	10049046	Control board
12	10006636	Fast Recovery Diode	27	10005040	Resistor
13	10007246	IGBT	28	10035607	Main transformer
14	10049044	Inverter board	29		
15	10001855	Fan & wires	30		

CUT 60/80/100 AIR PLASMA CUTTING MACHINE
Order codes JP-60, JP-80, JP-100

© Wilkinson Star Limited

Issue 1 June 2015

Product is subject to change without notice